Battery Charging and Protection Series

5S 18650 Lithium-Ion Battery Charging, Protection and Balancing Board w MPPT – BCPB3 (PS-BC12112)

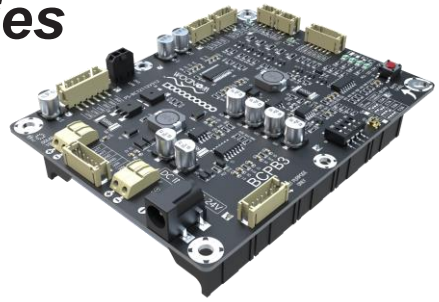

Overview:

BCPB3 is a highly reliable Lithium-Ion Battery Charging, Protection, and Balancing Board that operates with wide input range, 5-24V. This board able to charge the batteries from input voltages above, below, or equal to the output voltages. It is designed for 5 in series 18650 Lithium-Ion Battery which provides approximately 50-70Wh energy. The MPPT charging integrated feature supports a 15-24V power supply. BCPB3 is complemented with a visualized display of battery level indicators. To ensure the reliability of this board, it is equipped with full protection circuit; overcurrent, over-temperature, short circuit, and over/under voltage protection. The battery balancing IC allows constant battery voltage between 5 in series 18650 Lithium-Ion cells. It is designed for industrial application with verified MTBF for low-temperature increment under rigorous design.

Distributors:

PARTS EXPRESS – YOUR ELECTRONICS CONNECTION

Newark – AN AVNET COMPANY

boomaudio!

AUDIOPHONICS

SOUND IMPORTS.

All BCPB Series are complied with RoHS and pre-tested with our power supply solution adheres to FCC and CE. FCC, CE, and RoHS certification will be provided per customer requests. The test reports for high and low temperature with 200 cycles of HASS Test will be provided once requested by customer through emails and this request is applicable for bulky purchases of MOV USD$10,000 or

Block Diagram

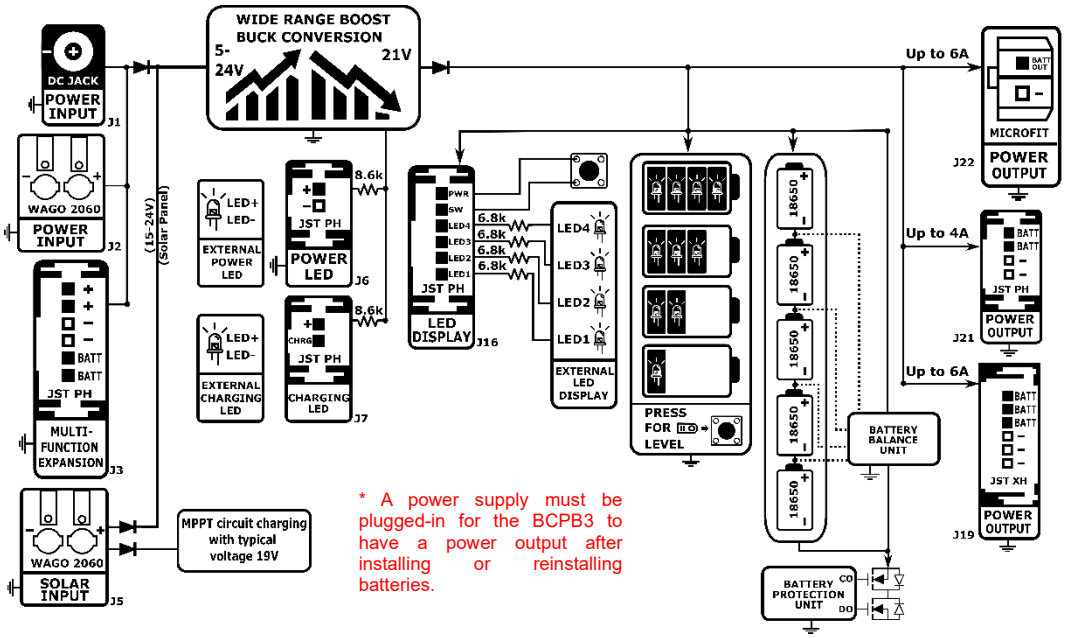

* A power supply must be plugged-in for the BCPB3 to have a power output after installing or reinstalling batteries.

Note: All the components in the block diagram are grounded except Charging LED for External Port (J7) and LED Display for External Port (J16). Lithium-Ion Cells are connected to battery protection and balance circuit and then grounded. All the Power Output, including the battery level indication module will be disconnected once the board goes into a protection mode. When the battery is fully charged, the voltage across the charging LED shunt resistor is approximately 28V and drops drastically to 0V when there is no power supplied to the board.

Applications:

- Industrial Applications
- DIY and IoT Purposes
- Power Bank for Router/ Drone
- High Power Portable Speaker
- Time Lapse Camera

Key Features:

- 5-24V Wide Range Charging Voltage
- Large Battery Capacity with 5S 18650 Cells
- Full Protection Circuit; Short Circuit, Over-temperature,
- Battery Voltage Balancing
- Solar Charging Supported
- Multiple Output Ports
- Charge and Discharge at the Same Time
- LED Indicators for Battery Level

Ready for:

FC CE

Contact Info

- **Email:** info@wondom.com

WONDOM™

Notes:

1. Sure Electronics does not provide technical support for any behavior of connecting the board with power supply out of the recommended range. Any damage/problem arises due to this, will not be covered by the warranty.
2. Remove battery from the circuit board if it is not use for a long time.
3. For initial charging, it is normal for the board to take longer time to fully charge.
4. If the board goes into a protection mode or the battery has been re-installed, please recharge the board with DC Input Jack to reactivate.
5. Please check the battery polarity before installation. This board can be used with Lithium-Ion battery ONLY. Other batteries, including LiFePO4 is prohibited.
6. Please note, this board is prohibited to be connected in parallel or in series.

Electrical Specifications

Specifications typical @ +25℃ unless otherwise noted. Specifications subject to change without notice.

Parameters	Conditions	Min.	Typ.	Max.	Units
Supply Voltage	Both wide input range, DC Jack (J1) and Wago 2060 (J2) through diode.	5	-	24	VDC
	Solar panel input, Wago 2060 through a diode (J5).	15		24	VDC
Supply Current	Supply current at wide input range, DC Jack (J1) & Wago 2060 (J2) are limited by boost circuit only, so typical current limitations are same.	0.75	1.5	-	A
Output Current	JST-PH (J21). Peak current 8A for 200ms.	-	4.0	4.0	A
	Molex Micro-Fit (J22). Peak current 12A for 200ms.	-	6.0	8.0	A
	JST-XH (J19). Peak current 12A for 200ms.	-	6.0	8.0	A
Charge current	Pre-charge current (0-140mA) might take hours before going to constant current charge mode at 0.5A minimum charge current. The charging current decreases dramatically after reaching constant voltage mode which start at 4.2V. The maximum charge current can only be obtained if I_{in} = 1.5A, V_{in} = 19V are supplied to the board. Charge current decreases if lower input current and voltage applied to the board. Charge current can be controlled by 4 positions slide switch. See charging control at pin definitions section for further details on the charge current selection.	0.5 -15%	0.5 (by default setting)	0.9 +15%	A
Over-Current Protection	Do not connect the battery directly to the load, otherwise the overcurrent protection circuit cannot function properly. 14A peak current for 200ms.	6.0	8.0 (cont. and max.)		A
Battery Capacity	Use 2300mAh to get the typical value. Refer battery's user manual if you are using your own battery.	2300mAh 18650 Lithium-Ion Battery			
Overcharge Detection Voltage (per cell)	Once overcharge triggered, users are supposed to wait until voltage drops to overcharge release voltage and activate again for normal use.	4.19	4.24	4.29	V
Overcharge Release Voltage (per cell)		4.00	4.18	4.22	V
Over-Discharge Detection Voltage (per cell)	A power supply must be plugged into the holder for the BCPB3 to have power output after installing or reinstalling batteries. This activation process should be re-executed once the board goes into the protection mode.	2.72	2.80	2.88	V
Over-Discharge Release Voltage (per cell)		2.90	3.00	3.10	V
Operating Temperature	For wide operation range version, please contact us for solutions.	0	20	50	℃

Note: All parameters were tested with the GwInstek GDM-8341 multimeter. All charge and discharge curves are from Hioki LR8500 Data Loggers. For authorized distributors and OEM customers who need more detailed performance graphs and parameter settings, please send an inquiry e-mail to us. Raw test data and graphs from data analysis software will also be provided (Not available for retail customers).

Charge and Discharge Curve

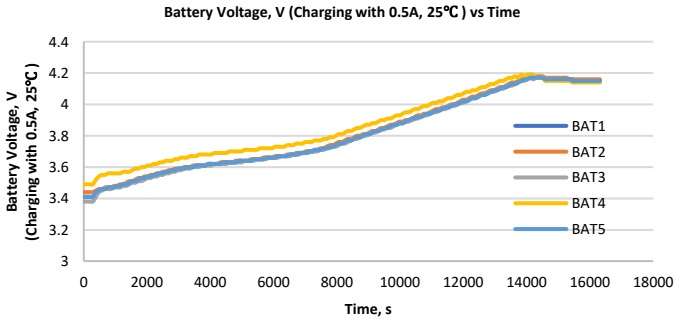

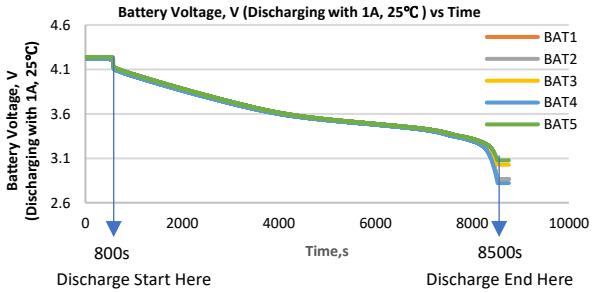

Note: The battery balancing circuit in this board allows the charge and discharge voltage across 5S 18650 Lithium-Ion Battery to be almost the same. Balancing is activated at the end of each charging cycle. OEM customers can require our raw test data of up to 200 charge/discharge test cycles to evaluate the battery performance and the balancing performance. Test curves are based on batteries used up for less than 200 charge/discharge cycles. Batteries used for more than 200 charge/discharge cycles will not absolutely be balanced during charging and discharging. Plus, the battery capacity might be less than the initial cycle.

Charge Characterization

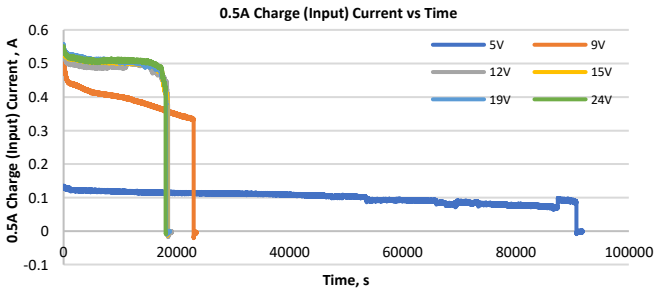

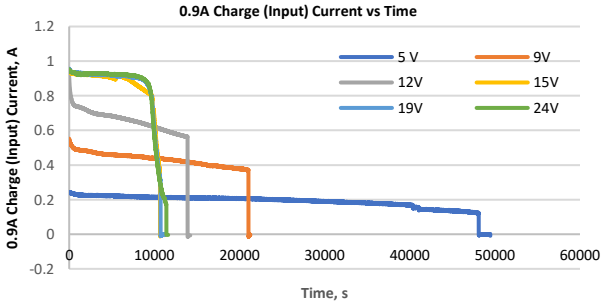

Note: A higher current takes lesser time to fully charge and discharge. 5V input voltage takes the longest time for the battery to be fully charged compared to other input voltage with the same charge current. Charge current is approximately the same when input is higher than 9V, hence, time to fully charge will be almost the same.

Self Discharge Rate

The self-discharge rate can be observed through the battery discharging rate. The battery discharge rate is independent of the circuit board discharging rate. Take reference from the battery datasheet for battery charging rate's details.

SELF DISCHARGE RATE	
Battery	5% -10% / MONTH
Battery Protection Circuit Standby Current Consumption	Typical 26 µA, Maximum 39 µA

DC-Uninterrupted Power Supply (UPS) Features

BCPB3 is designed as DC-Uninterrupted Power Supply (UPS). This unique feature allows this board to be charged and discharged at the same time, without interrupting.

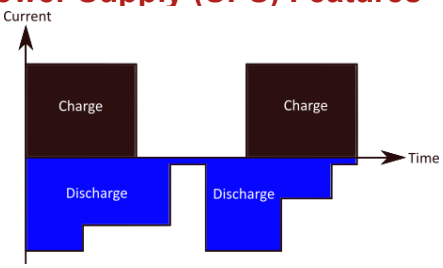

Cable Selections

Use 24 AWG or 0.25 mm^2 only for JST-PH connectors while 22 AWG or 0.10 mm^2 only for JST-XH output connector. The cable's temperature might be a little bit high. Take reference from the table below to see the maximum current of JST-PH and JST-XH connector can withstand at different temperature. It is suggested to use 18 AWG or 0.75mm^2 for Molex Micro-Fit and and Wago 2060 connectors when connecting the board to the output and solar input respectively. See Current Derating Reference Information Table for 20 AWG or 0.5mm^2 cable. 5.5/2.1mm or compatible plug is suggested for wide range DC Jack input. For industrial customers, we provide customized wire harness and 3D/2D wire diagram for your reference.

``AWG	Conductor Cross Section (mm^2)	Suggested Metric (mm^2)	Number of 4-Pair Cables in Bundle					
			1			2-7		
			Temperature Rating (°C)					
			60	75	90	60	75	90
			Maximum Current (A) per Conductor					
26	0.129	0.14	1	1	1	1	1	1
24	0.205	0.25	2	2	2	1	1.4	1.6
22	0.326	0.40	3	3	3	1.4	1.8	2.1

Current Derating Reference Information			
AWG	Suggested Metric (mm^2)	2-CKT	
		Wire to Wire	Wire to Board
18	0.75	7	8.5
20	0.5	6.5	7

Standard Accessories

A dual header of PH 4-PIN cable and Micro-Fit 2-PIN cable will be provided as standard accessories. You can cut the PH 4-PIN cable into half as shown in the picture below to get 2 PH cables. LED battery display kit and L-bracket are optional accessories for BCPB3. You can use your own cable for other connectors or get the unprovided cable and optional accessories at our webstore.

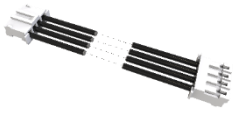

a) JST-PH-4PIN



b) Micro-Fit-2PIN

Bulk Order Information

For bulk purchases of more than 500 pieces, customers can email to request for special quotation at info@sure-electronics.com or info@wondom.com. 4K Resolutions Videos, Thermal Images, and STP Files are provided upon requests (Applicable only for system integrator with bulk purchase). STL Files, DWG Files, Product Videos, High Resolutions Product Pictures are open for download to retail customers. We will provide CE and FCC certificates upon request for the customized bulk purchase. Our product is EU REACH and RoHS 3 (EU 2015/863) compliant. Other necessary files (not included in the BCPB3 product module) shall be provided upon request from the system integrator, and bulk purchasers.

Item Provided	Bulk Purchases	Retail Purchases
STL Files	✓	✓
STP Files*	✓	✗
DWG Files	✓	✓
4K Resolutions Videos*	✓	✗
Product Videos (YouTube)	✓	✓
High Resolutions Product Pictures	✓	✓
Thermal Images*	✓	✗

Dimensions

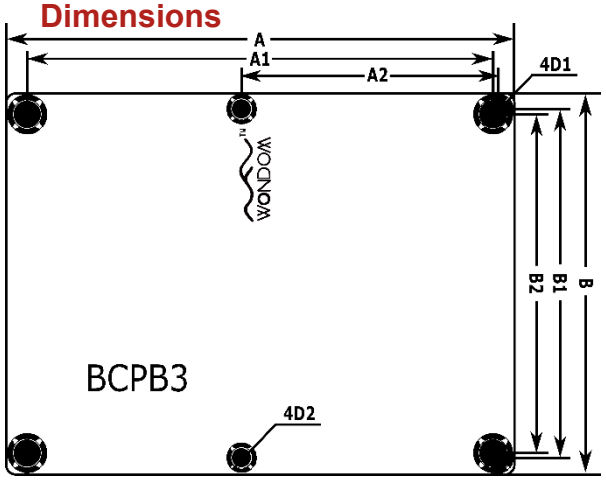

Dimensions	A (inch/mm)	A1 (inch/mm)	A2 (inch/mm)
	4.80/ 122.0	4.40/ 111.8	2.40/ 61.0
	B (inch/mm)	B1 (inch/mm)	B2 (inch/mm)
	3.60/ 91.5	3.20/ 81.3	3.30/ 83.8
	D1 (mm)	D2 (mm)	
	3.6 *Use 3 mm or #6-32 screw ONLY (not provided)	*Use 3 mm or #6-32 screw ONLY (not provided). Compatible with BCPB2 or 3.6"x2.7" board from Sure Electronic products.	

Notes:

- All dimensions are typical in inches/mm
- Tolerance x.xx = ±0.004''(±0.1mm)
- Battery holder's height: 0.85''/21.5 mm
- Maximum height of component's side: 0.43''/ 11.0 mm
- Total height: 1.38''/ 35.0 mm

Port Definitions

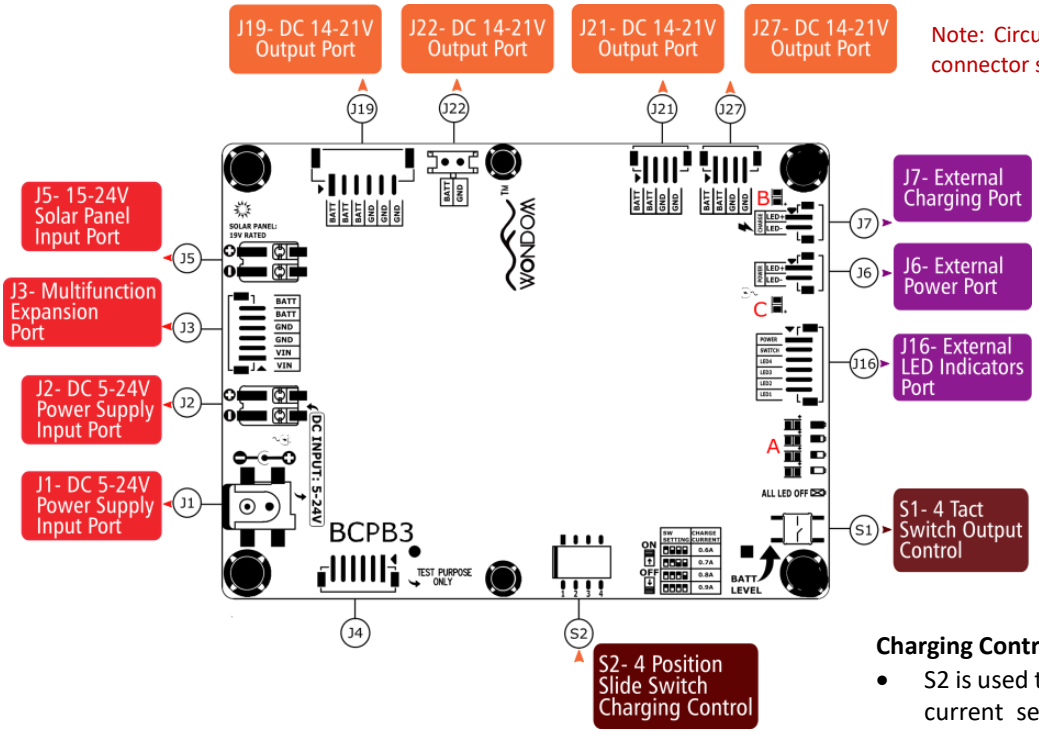

Note: Circuit 1 for PH and XH connector starts from the right

Input Options:

- J1 DC Wide Input Range 5-24V, 5.5/2.1mm Jack
- J2 DC Wide Input Range 5-24V Wago 2060

Circuit	Definition
1	VIN
2	GND

- J5 DC 15-24V Solar Panel Input Wago 2060

Circuit	Definition
1	VIN
2	GND

Output Options:

- J19 DC 14V-21V JST XH-2.5mm 6-CKT

Circuit	Definition
1	BATT
2	BATT
3	BATT
4	GND
5	GND
6	GND

- J21 DC 14V-21V JST PH-2mm 4-CKT

Circuit	Definition
1	BATT
2	BATT
3	GND
4	GND

- J22 DC 14V-21V Molex Micro Fit 2-CKT

Circuit	Definition
1	BATT
2	GND

- J27 DC 14V-21V JST PH-2mm 4-CKT

Circuit	Definition
1	BATT
2	BATT
3	GND
4	GND

External LED Indicators Port:

- J16 PH-2mm-6CKT

Circuit	Definition
1	POWER
2	SWITCH
3	LED4
4	LED3
5	LED2
6	LED1

LED Indicator for External Charging Port:

- J7 PH-2mm-2CKT

Circuit	Definition
1	LED+
2	LED-

LED Indicator for External Power Port:

- J6 PH-2mm-2CKT

Circuit	Definition
1	LED+
2	LED-

Multifunction Expansion Port:

Only circuit 1 & 2 are designed for power input. See BCPB-CB and BCPB-UC User Manuals for details explanations for these ports.

- J3 PH-2mm-6-CKT

Circuit	Definition
1	VIN
2	VIN
3	GND
4	GND
5	BATT
6	BATT

LED Indicators (Position A) for Battery Level Status:

- Four LED indicators for battery level status. Short press tact switch, S1 to check battery level

LED Indicators (Position B) for Charge:

Mode	Status
Charging	○
Fully Charged	×

○: ON ×: OFF

Charging Control: S2, 4 Bits Slide Switch

- S2 is used to set the 4 rated charge current. The current setting might vary 15% for absolute value and another 15% for incremental.
- Use a smaller charge current to protect your battery. It is recommended to use 600mA for suggested 2300mAh battery kits for 4 hours typical charge time.
- A higher charge current results in raising the battery's internal temperature because ions have finite mobility and are easily damaged when charging with a high current.
- Hence, it is encouraged to charge your board at a low charging current to prolong your battery life.

Number of Switch	Charge Current
0	0.50A
1	0.60A
2	0.70A
3	0.80A
4	0.90A

LED Indicators (Position C) for Power status:

Mode	Status
Power	○
No Power	×

○: ON ×: OFF

Sure Electronics
Have Fun With Us!
WONDOM™
WONDOM Audio Technology
www.sure-electronics.com
www.wondom.com
Mail:store@sure-electronics.com
Skype: surewebstore
58-7-02, Wisma Fortune Heights,
Jalan Cantonment,
10350 Georgetown,
Penang, Malaysia
Tel: 04 -218 9323