High Power Stereo Series

2 x 400Watt 3 Ohm Class D Audio Amplifier Board - T-AMP (AA-AB32314)



Key Features:

- **Output Power**
  400W@3Ohm 44V DC THD+N 10%
  211W@3Ohm 44V DC THD+N 1%
- **Clip Indicator**
- **Temperature Control Fan**
- **Overcurrent Protection**
- **Overtemperature Protection**
- **Optimized Heatsink Design**
- **Support Volume Control Board (VC01)**
- **Weight:586g/1.29 lbs (±10%)**
- **Size:6.00inchX4.50inchX1.53inch**

Distributors:

PARTS EXPRESS YOUR ELECTRONICS CONNECTION · MCM · AXIOMEDIA · HOBBYHIFILADEN · AUDIOPHONICS · Yokohama Bayside Net

All these boards are per-tested with our power supply solution to comply with FCC and CE. For all customers who need those information, please contact our distributor or Sure Electronics. RoHS compliant will need an MOQ of 1000pcs per order.

Ready for:

FC CE RoHS

Contact info

- **Email:**
  info@sure-electronics.com

WONDOM™

Electrical Specifications

Specifications typical @ +25℃, powered by 44V DC, unless otherwise noted. Specifications subject to change without notice.

Parameter	Conditions	Min.	Typ.	Max.	Units
Power Supply	-	24	44	-	VDC
Idle Power	SD Floating, FAN ON	-	12.8	18	W
	SD Floating, FAN OFF	-	11.4	15	W
Standby Power	SD Connected to GND, FAN OFF	-	0.4	3	W
Maximum Current	800W @ 3Ohm	-	20.2	-	A
Efficiency	400W @ 3Ohm	87	-	92	%
Minimum Load Impedance	-	-	3	-	Ω
Switching Frequency	SD Floating	-	730	-	KHz
Fan Active @ Temperature	-	-	50	-	℃

Audio Performance

Specifications typical @ +25℃, powered by 44V DC, unless otherwise noted. Specifications subject to change without notice.

Parameter	Conditions	Min.	Typ.	Max.	Units
Gain	-	28	30	32	dB
Input Sensitivity(RMS)	@3Ω,400W,1KHz	-	1.56	-	V
Input Impedance	-	-	10		KΩ
Output Power	@3Ω THD+N 1%	-	211	-	W
	@3Ω THD+N 10%	-	400	-	W
Bandwidth @ ±3dB	@3Ω	20	-	20K	Hz
THD	@3Ω, 1W, 1KHz	-	0.013	-	%
	@3Ω, 10W, 1KHz	-	0.017	-	%
Output Noise Level	A-weighting, Input Connected to GND	-	206	-	μV
SNR	211W @3Ω THD+N 1%	-	93	-	dB

Typical Performance Graphs

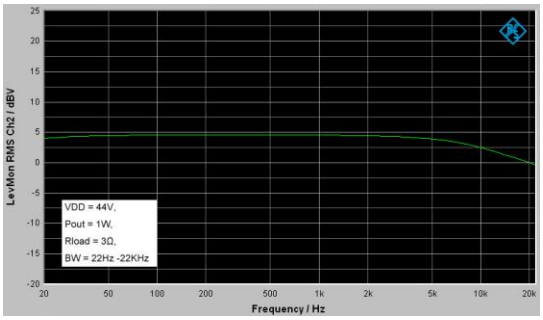

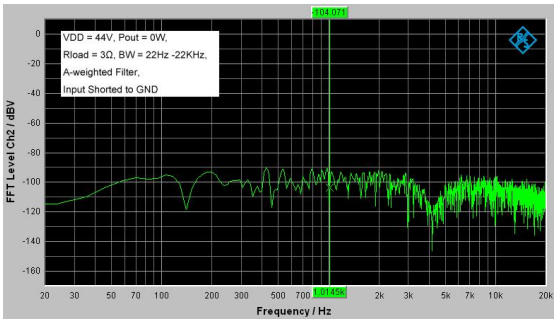

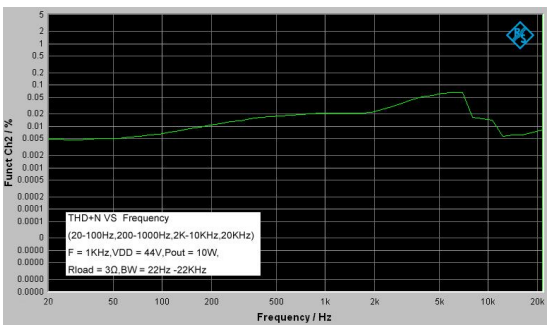

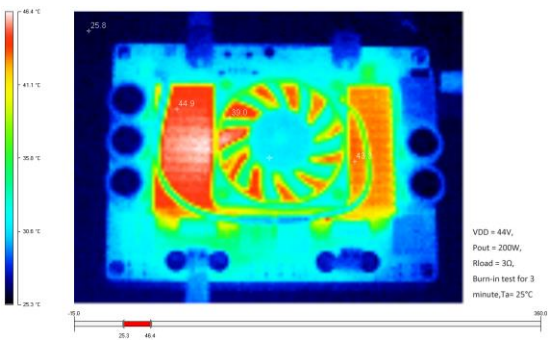

All parameters were tested with Rohde & Schwarz UPV audio analyzer (AES17 filter enabled) and Audio Precision AUX0025 filter. For authorized distributors and OEM customers who need more detailed performance graphs and parameter settings, please send an inquiry e-mail to us. (Not available for retail customers)

Model Selection Guide

Model Number	Output Power	Power Supply Range	Typical Load	Amplifier IC	Dimensions
AA-AB32196	2 X 300Watt	DC 24-40V	3Ω	T-AMP	6"X4.5"#1
AA-AB32314	2 X 400Watt	DC 24-44V	3Ω	T-AMP	6"X4.5"
AA-AB32514	2 X 500Watt	DC 24-50V	3Ω	T-AMP	6"X4.5"
AA-AB32195	2 X 300Watt	DC 15-42V	3Ω	T-AMP	4.8"X3.6"#2
AA-AB32313	2 X 400Watt	DC 15-48V	3Ω	T-AMP	4.8"X3.6"
AA-AB32512	2 X 500Watt	DC 25-50V	3Ω	T-AMP	4.8"X3.6"
AA-AB32192	2 X 300Watt	DC 25-48V	4Ω	TAS5630B	4.8"X3.6"
AA-AB32191	2 X 300Watt	DC 25-48V	4Ω	TAS5630B	6"X4.5"

Notes:

1. The output power is rated at the condition THD+N 10%,1kHz sine wave.

2. All amplifier boards don't employ power supply reverse polarity protection. Stresses beyond the power supply range maximum ratings may cause permanent damage.

3. None typical load may cause rating power reduction.

4. Dimensions mean length and width of PCB only, excluding excessive part out of the PCB outline.

5. If any model within product series is out of stock, another model with compatible size and function, featuring more rating output power will be sent as the substitute without notice.

6. All parameters were tested with Rohde & Schwarz UPV audio analyzer (AES17 filter enabled) and AP AUX0025 filter. Linear Power Supply units were used for testing.

7. Sure Electronics promises all standard products life cycle more than 5 years. Sure Electronics reserves the right to update the version without notice. All the products sent to retail customers are the latest version. We will provide back-to-order service (100 Pieces MOQ needed) for our distributors in 5 years.

8. Suggested power supply solution:
Mean Well MW 48V 20.8A 1000W AC/DC Switching Power Supply SE-1000-48 (PS-SP11192)
If you have other power supply requirements, please feel free to contact us.

Mechanical Dimensions

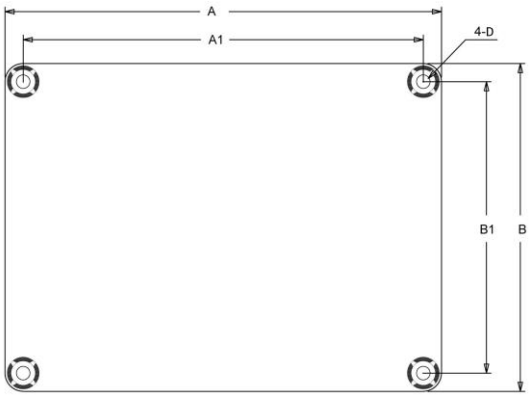

Dimensions	A (inch/mm)	A1 (inch/mm)	B (inch/mm)	B1 (inch/mm)	D (inch/mm)
#1	6.00/152.40	5.60/142.24	4.50/114.30	4.10/104.14	0.15/3.8
#2	4.80/121.92	4.40/111.76	3.60/91.44	3.20/81.28	0.15/3.8

Notes:
· All dimensions are typical in inches/mm
· Tolerance x.xx = ±0.02(±0.50)
Height:
AA-AB32191: 1.2inch/30.48mm
Others: 1.53inch/38.86mm

Connections

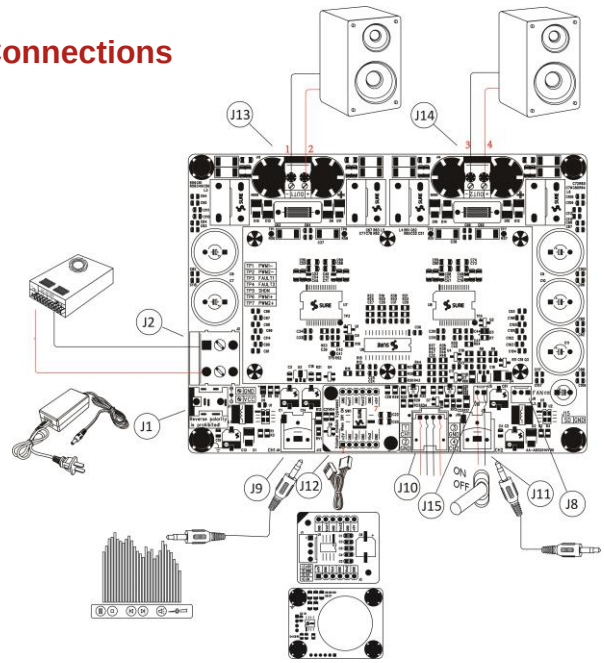

Power Supply Connector:
- J1 DC Jack 5.5mm/2.5mm
- J2 Terminal Block RJ128 (optional)

Pin	Function
■	GND
●	VCC

Shutdown Control Connector:
- J15 2pin 2510 Connector

Pin	Function
■	GND
●	SD

Fan Control Connector:
- J8 3pin 2510 Connector

Volume Control Board Socket (Volume module bypassed when SW1 ON)
- J12

Pin	Function	Pin	Function	Pin	Function
1, 7	+5V	3	Vin1	5	Vin2
2, 4, 6, 8, 10, 12	GND	11	Vout1	9	Vout2

Audio Input Connector:
- J9, J11 RCA Jack
- J10 Molex Connector (optional)

Pin	Function
1	CH1
2	GND
3	GND
4	CH2

Speaker Output Connector:
- J13, J14 Terminal Block RJ128

Pin	Function
1	OUT1-
2	OUT1 +
3	OUT2-
4	OUT2 +

WONDOM™

Sure Electronics

Make Your Audio Application Simple!

NO.9, Weidi Road, Xianlin University City, Qixia District, Nanjing, Jiangsu Province, P.R.C

www.sure-electronics.com
www.wondom.com
Mail: store@sure-electronics.com
Skype: surewebstore