High Power Mono Series

1 x 2000 Watt 2 Ohm Class D Audio Amplifier Board - IRS2092 (AA-AB31381)



Key Features:

- **Output Power**
  2000W@ 2Ohm ±84V DC THD+N 10%
  1680W@ 2Ohm ±84V DC THD+N 1%
- **Power and Shutdown Indicator**
- **Overcurrent Protection**
- **Overtemperature Protection**
- **Optimized Heatsink Design**
- **Low Noise Cooling Fan**
- **4-screw Easy Installation**
- **Weight: 828g/ 1.83 lbs (±10%)**
- **Size: 6.00 x 4.50 x 2.50 inches**

Distributors:

PARTS EXPRESS YOUR ELECTRONICS CONNECTION · MCM · AXIOMEDIA · HOBBYHIFILADEN · AUDIOPHONICS · Yokohama Bayside Net

All these boards are per-tested with our power supply solution to comply with FCC and CE. For all customers who need those information, please contact our distributor or Sure Electronics. RoHS compliant will need an MOQ of 1000pcs per order.

Ready for:

FC CE

RoHS

Contact info

- **Email:**
  info@sure-electronics.com

WONDOM™

Electrical Specifications

Specifications typical @ +25℃, powered by ±84V DC, unless otherwise noted. Specifications subject to change without notice.

Parameter	Conditions	Min.	Typ.	Max.	Units
Power Supply	-	±55	±84	±85	VDC
Idle Power	SD Floating, FAN ON	-	7.1	-	W
	SD Floating, FAN OFF	-	5.6	-	W
Standby Power	SD Connected to GND,FAN OFF	-	0.7	-	W
Maximum Current	2000W @ 2 Ohm	-	25.1	-	A
Efficiency	2000W @ 2 Ohm	-	95	-	%
Under Voltage Protection	-	-	±50	-	V
Over Voltage Protection	-	-	±92	-	V
Over Temperature Protection	-	-	100	-	℃
Minimum Load Impedance	-	-	1	-	Ω
Switching Frequency	SD Floating	-	360	-	KHz

Audio Performance

Specifications typical @ +25℃, powered by ±84V DC, unless otherwise noted. Specifications subject to change without notice.

Parameter	Conditions	Min.	Typ.	Max.	Units
Gain	-	-	31	-	dB
Input Sensitivity(RMS)	@2 Ohm, 2000W, 1KHz	-	2.1	-	V
Input Impedance	-	-	3.3	-	KΩ
Output Power	@2 Ohm, THD+N 1%	-	1680	-	W
	@2 Ohm, THD+N 10%	-	2000	-	W
Bandwidth @ ±3dB	@2 Ohm	20	-	20K	Hz
THD	@2 Ohm, 1W, 1KHz	-	0.011	-	%
	@2 Ohm, 10W, 1KHz	-	0.023	-	%
Output Noise Level	A-weighting, Input Connected to GND	-	301	-	μV
SNR	1680W @ 2 Ohm, THD+N 1%	-	99	-	dB

Typical Performance Graphs

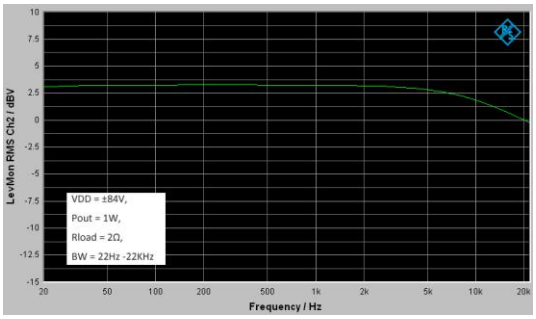

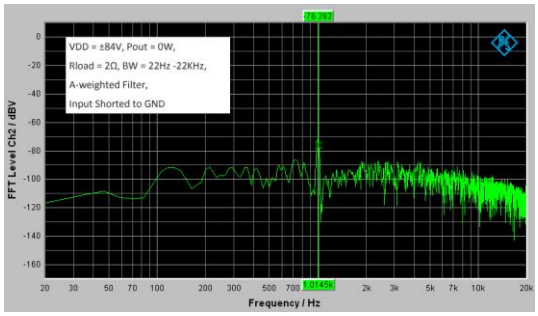

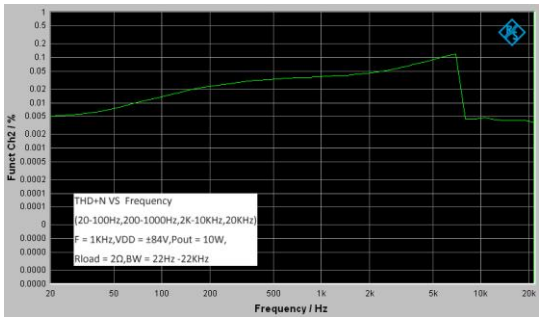

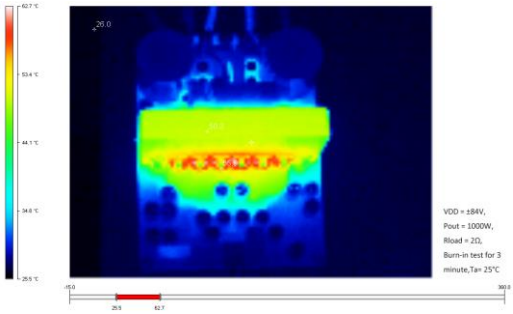

All parameters were tested with Rohde & Schwarz UPV audio analyzer (AES17 filter enabled) and Audio Precision AUX0025 filter. For authorized distributors and OEM customers who need more detailed performance graphs and parameter settings, please send an inquiry e-mail to us. (Not available for retail customers)

Model Selection Guide

Model Number	Output Power	Power Supply Range	Typical Load	Amplifier IC	Dimensions
AA-AB31512	1 X 500Watt	±55-±65V	4Ω	IRS2092	6"X4.5"#1
AA-AB31431	1 X 750Watt	±55-±75V	4Ω	IRS2092	6"X4.5"
AA-AB31391	1 X 1000Watt	±55-±65V	2Ω	IRS2092	6" X 4.5"
AA-AB31411	1 X 1500Watt	±55-±75V	2Ω	IRS2092	6" X 4.5"
AA-AB31381	1 X 2000Watt	±55-±85V	2Ω	IRS2092	6" X 4.5"
AA-AB31491	1 X 2500Watt	±55-±95V	2Ω	IRS2092	6" X 4.5"
AA-AB31341	1 X 3000Watt	±55-±85V	4Ω	IRS2092	9" X 6" #2
AA-AB32321	2 X 125Watt	±55-±75V	8Ω	IRS2092	5.7" x 4"#3
AA-AB32291	2 X 250Watt	±60-±80V	8Ω	IRS2092	5.7" x 4"
AA-AB32511	2 X 500Watt	±55-±65V	4Ω	IRS2092	6"X4.5"
AA-AB32431	2 X 750Watt	±55-±75V	4Ω	IRS2092	6"X4.5"
AA-AB32391	2 X 1000Watt	±55-±65V	2Ω	IRS2092	9"X6"
AA-AB32411	2 X 1500Watt	±55-±75V	2Ω	IRS2092	9"X6"

Notes:

1. The output power is rated at the condition THD+N 10%,1kHz sine wave.

2. All amplifier boards don't employ power supply reverse polarity protection. Stresses beyond the power supply range maximum ratings may cause permanent damage.

3. None typical load may cause rating power reduction.

4. Dimensions mean length and width of PCB only, excluding excessive part out of the PCB outline.

5. If any model within product series is out of stock, another model with compatible size and function, featuring more rating output power will be sent as the substitute without notice.

6. All parameters were tested with Rohde & Schwarz UPV audio analyzer (AES17 filter enabled) and AP AUX0025 filter. Linear Power Supply units were used for testing.

7. Sure Electronics promises all standard products life cycle more than 5 years. Sure Electronics reserves the right to update the version without notice. All the products sent to retail customers are the latest version. We will provide back-to-order service (100 Pieces MOQ needed) for our distributors in 5 years.

8. Suggested power supply solution:
2000VA Hand Made Toroidal Transformer (PS-RT11112)
100V 30A 35000uF Rectifier Board (AA-AB41122)
If you have other power supply requirements, please feel free to contact us.

Mechanical Dimensions

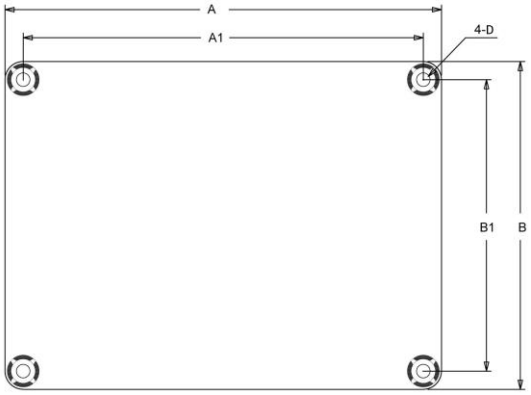

Dimensions	A (inch/mm)	A1 (inch/mm)	B (inch/mm)	B1 (inch/mm)	D (inch/mm)
#1	6.00/152.40	5.60/142.24	4.50/114.30	4.10/104.14	0.15/3.8
#2	9.00/228.6	8.60/218.44	6.00/152.40	5.60/142.24	0.15/3.8
#3	5.7/144.78	5.3/134.62	4/101.6	3.6/91.44	0.14/3.6

Notes:
· All dimensions are typical in inches/ mm
· Tolerance x.xx = ±0.02(±0.50)
Height: 2.50inch/ 63.5mm

Connections

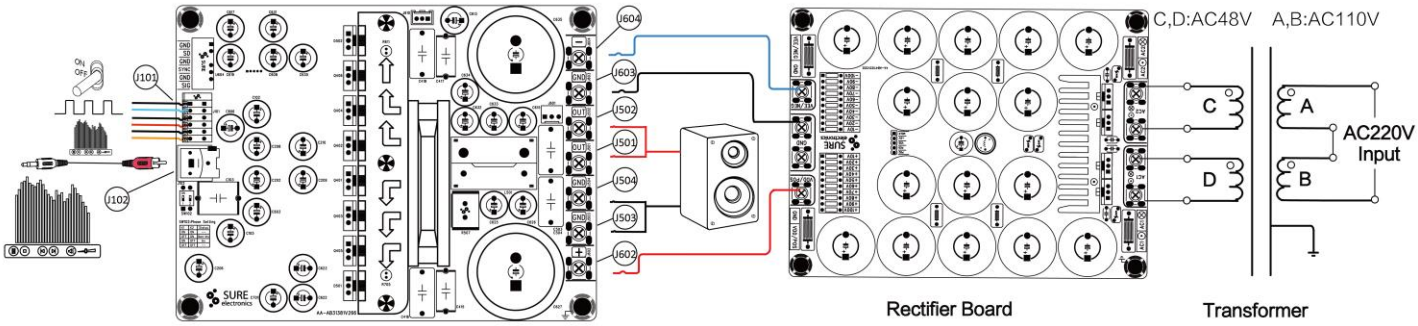

Power Supply Connector:
- J602, J604, J603 Terminal Block

Pin	Function
602	+
603	GND
604	-

Audio Input Connector:
- J102 RCA Jack

Speaker Output Connector:
- J501, J502, J503, J504 Terminal Block

Pin	Function
J501, J502	OUT
J503, J504	GND

Control Connector:
· J101 Terminal Block RJ141V

Pin	Function
■	GND
●	SD
●	GND
●	SYNC
●	GND
●	SIG

WONDOM™

Sure Electronics

Make Your Audio Application Simple!

NO.9, Weidi Road, Xianlin University City, Qixia District, Nanjing, Jiangsu Province, P.R.C

www.sure-electronics.com
www.wondom.com
Mail: store@sure-electronics.com
Skype: surewebstore