JAB Series

2 x 30 Watt Class D Audio Amplifier Board w DSP - JAB3 (AA-JA32473)

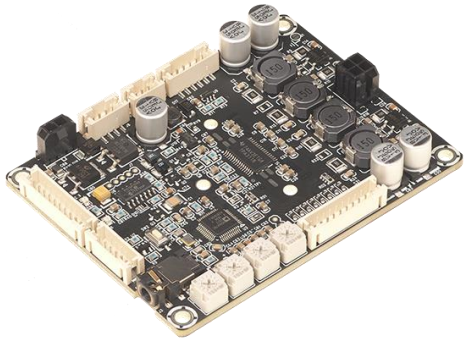

Key Features

- 3.60 x 2.70 Inches PCB Size
- Battery Board Supported*
- Power Management Circuit
- DSP Integrated
- Gain of Speaker Output Adjustable
- High-pass Filter of Speaker Output Adjustable
- High-pass Filter of 3.5mm Headphone Output Adjustable
- Overall Volume Adjustable
- Signal Level Sensor System*
- External 3.5mm AUX IN Port
- Power Switch Port*
- 3.5mm Headphone Output
- Compatible with JAB2*

Distributors:

PARTS EXPRESS YOUR ELECTRONICS CONNECTION

MCM

AXIOMEDIA

HOBBYHIFILADEN

AUDIOPHONICS

Yokohama Bayside Net

All Audio Amplifier boards are complied with ROHS and they are pre-tested with our power supply solution to comply with FCC and CE. We could provide FCC, CE and RoHs certifications for customers' convenience. The test reports will be provided upon requests by e-mails only for customers who apply for bulky purchasement of MOV USD$10,000 or MOQ 500pcs.

Ready for:

FC CE

Contact Info

- **Email:** info@wondom.com

WONDOM™

Electrical Specifications

Specifications typical @ +25℃, Powered by 24V DC, unless otherwise noted. Specifications subject to change without notice.

Parameter		Conditions	Min.	Typ.	Max.	Units
Number of Channels		-	-	2	-	-
Minimum Load Impedance		-	3.2	4	-	Ω
Efficiency		2 x 30W@8Ohm, 1kHz	-	84	-	%
Nominal Power Requirement		@24V, 1kHz	-	130	-	W
Operating Voltage		@1kHz, 8Ohm	12	24	26	V
Idle Power		Signal detected	-	2	-	W
		No Signal detected	-	60	-	mW
Switching Frequency		SD Floating@24V	-	400	-	kHz
Power Consumption		1/4 of max output power@8Ohm, 24V, 1kHz	-	20	-	W
		1/8 of max output power@8Ohm, 24V, 1kHz	-	10	-	W
Control	Standby (Low = inputs enabled)	High-level Input Voltage	6.0	-	-	V
		Low-level Input Voltage	-	-	0.4	V
	Mute (High = outputs enabled)	High-level Output Voltage	3.5	-	-	V
		Low-level Output Voltage	-	-	0.4	V
Standby Power		SD short to GND, only when low power module available	-	120	-	mW
Under Voltage Protection		-	10.0	10.4	10.8	V

Audio Performance

Specifications typical @ +25℃, powered by 24V DC, unless otherwise noted. Specifications subject to change without notice.

Parameter		Conditions	Min.	Typ.	Max.	Units
Amp Gain		@8Ohm, 20Hz - 20kHz	-	26	-	dB
DSP Gain	SE1 (Single Amp)	@8Ohm, 1kHz	-60	-	0	dB
	SE2 (Headphone)	@8Ohm, 1kHz	-60	-	6.5	dB
Input Sensitivity		2 x 30W@8Ohm, 1kHz, 26dB		770		mV
Filter Gain		Butterworth, Q= 0.707	-	4	-	dB
Cutoff Frequency		HFP	0.25	-	2	kHz
		LFP	-	20	-	kHz
SNR		2 x 30W@8Ohm, THD+N=1%, 26dB, A-weighting		88		dB
THD+N		5W@8Ohm, 1kHz, 24dB		0.04		%
		10W@8Ohm, 1kHz, 24dB		0.06		%
Input Impedance		-		10		kΩ
Supported Sampling Rates		-	-	48	-	kHz
Output Noise Level		A-weighting, Input Connected to GND, 26dB		260		uV
DC Offset		-		10		mV
Max output Level		J3, 3.5mm Headphone Output Connector		7.8		dBu
Crosstalk Separation		20Hz-20kHz, Gain=26dB	-	-60	-	dB

***Notes:

1. JAB3 can be powered by 3S18650 Lithium Battery Balance and Protection Extension Board (AA-JA11113), which is designed for protecting batteries and balancing voltage. Please kindly be noticed that the battery charging circuit is integrated in JAB1/2, which means that JAB1/2 is a requisite if you want to charge battery board.
2. Sure Electronics will update the hardware of JAB2 to make it fully compatible with JAB3. This means, when using JAB3 with this version JAB2 (PCB Version: AA-JA13217V150), some compatibility problem, like popping noise, may occur but will not affect the normal use. For more information about JAB2, contact us at store@sure-electronics.com.
3. Signal Level Sensor System has been employed in JAB3 for low power consumption. JAB3 will enter into standby mode when audio signal is not detected for long time (1min). Once audio signal is detected under this circumstance, JAB3 will restart to work. It is not malfunction if JAB3 enters into standby mode.
4. JAB3 can be connected with JAB2 through J5 port on JAB3 with a 6pin cable. This cable is provided in the Functional Cables Package for JAB3.
5. The basic cable package of JAB3 contains: one power cable, one speaker cable, one control cable and one 3.5mm AUX IN cable. If you have special requirements of cables, please contact us at store@sure-electronics.com.

All parameters were tested with Rohde & Schwarz UPV audio analyzer (AES17 filter enabled) and Audio Precision AUX0025 filter. For authorized distributors and OEM customers who need more detailed performance graphs and parameter settings, please send an inquiry e-mail to us. (Not available for retail customers)

Function of Potentiometers

Functions of potentiometers based on specific applications					
Port	**Function**	JAB3S	JAB3M	JAB3S+ JAB2	JAB3M+ JAB2
POT1	CH2 Gain	Gain of 3.5mm Headphone Output	Gain of 3.5mm Headphone Output	Gain of Stereo of JAB2	Gain of Stereo of JAB2
POT2	CH2 HPF	High-pass Filter of 3.5mm Headphone Output	High-pass Filter of 3.5mm Headphone Output	High-pass Filter of Stereo of JAB2	High-pass Filter of Stereo of JAB2
POT3	CH1 HPF or BPF	High-pass Filter of Speaker Output	Band-pass Filter of Speaker Output	High-pass Filter of Speaker Output of JAB3	Band-pass Filter of Speaker Output of JAB3
POT4	CH1 & CH2 Volume	Volume of Speaker & 3.5mm Headphone Output	Volume of Speaker & 3.5mm Headphone Output	Overall Volume of JAB3 & JAB2	Overall Volume of JAB3 & JAB2

Note:
1. The speaker output (J10) of the board with potentiometers is defined as CH1; 3.5mm headphone output (J3) or other integrated circuit output of the board with potentiometers is defined as CH2.
2. JAB3S refers to JAB3 in stereo mode, namely 2 x 50 Watt Class D Audio Amplifier Board w DSP - JAB3 (AA-JA32172) or 2 x 30 Watt Class D Audio Amplifier Board w DSP - JAB3 (AA-JA32473); JAB3M refers to JAB3 in mono mode, namely 1 x 100 Watt Class D Audio Amplifier Board w DSP - JAB3 (AA-JA31181) or 1 x 60 Watt Class D Audio Amplifier Board w DSP - JAB3 (AA-JA31211).
3. HPF refers to High-pass Filter; BPF refers to Band-pass Filter.
When CH1 is stereo output, the function of POT3 is HPF; when CH1 is mono output, the function of POT3 is BPF.
4. Four applications are exampled in this datasheet. For the functions of potentiometers when used in other applications, please contact us at store@sure-electronics.com.

Function	Range of Frequency
High-pass Filter (Stereo Mode)	20Hz- 2kHz
High-pass Filter (Mono Mode)	250Hz- 2kHz
Band-pass Filter	60HZ-120Hz (High-pass)
	200Hz-400Hz (Low-pass)

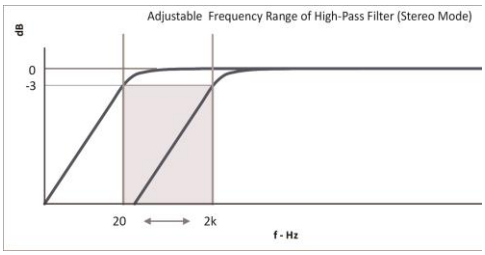

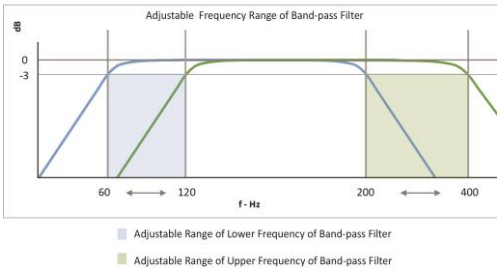

Mechanical Dimensions

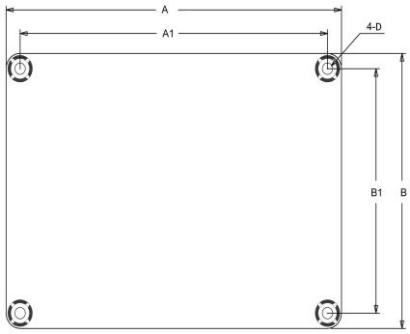

Dimensions	A (inch/mm)	A1 (inch/mm)	B (inch/mm)	B1 (inch/mm)	D (inch/mm)
	3.60/91.44	3.30/83.8	2.70/68.6	2.40/61.0	0.14/3.6

Notes:
· All dimensions are typical in inches/mm
· Tolerance x.xx = ±0.02(±0.50)

Connections

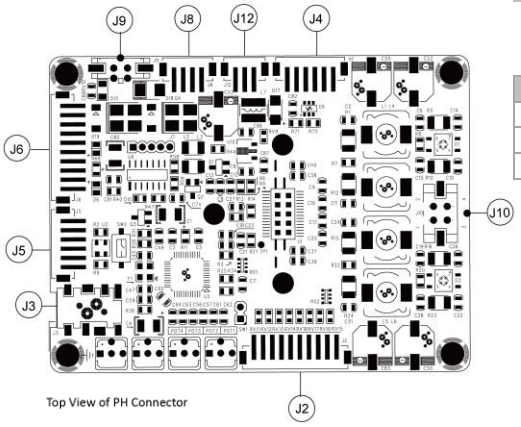

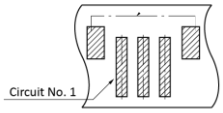

DSP Extension Port:
·J2, PH- 10Pin- 2mm

Pin	Definition	Pin	Definition
1	GND	6	MP00
2	DATA	7	MP01
3	LRCLK	8	MP05
4	BCLK	9	MP04
5	MP07	10	+3.3V

Programming Connector:
·J4, PH- 6Pin- 2mm

Pin	Definition	Pin	Definition
1	SDA	4	GND
2	SCL	5	VIN
3	WP	6	RST

Power Supply Connector:
·J9, Molex- 2Pin- 3mm

Pin	Definition
1	VCC
2	GND

Switch Control Connector*:
·J12, PH- 3Pin- 2mm

Pin	Definition
1	STBY
2	GND
3	MUTE

Audio Output Connector:
·J10, Speaker Output Connector
·J3, 3.5mm Headphone Output Connector

Audio Extension and Compatible Port:
·J5, PH- 6Pin- 2mm

Pin	Definition	Pin	Definition
1	LIN	4	GND
2	LOUT	5	ROUT
3	GND	6	RIN

Extension Connector:
·J6, PH- 10Pin- 2mm

Pin	Definition	Pin	Definition
1	VCC	6	LIN
2	VCC	7	GND
3	GND	8	RIN
4	LED1	9	KEY2
5	KEY1	10	LED2

Battery Board Connection Connector:
·J8, PH- 4Pin- 2mm

Pin	Definition	Pin	Definition
1	VBAT	3	GND
2		4	

*Notes:
1. Short circuit 'STBY' and 'GND' to enter into 'Standby' mode.
2. Don't short circuit 'MUTE' and 'GND' at any time. This position is used to synchronize with 'MUTE' pin on JAB2 to eliminate the popping noise.
3. When JAB3 is used separately, the 'MUTE' position will malfunction; when JAB3 is used together with JAB2, J12 must be connected with the 3pos control port on JAB2 for controlling the whole system. Short circuit 'EN' with 'GND' on JAB2 for system control.

WONDOM™

Sure Electronics

Make Your Audio Application Simple!

NO.9, Weidi Road, Xianlin University City, Qixia District,
Nanjing, Jiangsu Province, P.R.C

www.sure-electronics.com
www.wondom.com
Mail: store@sure-electronics.com
Skype: surewebstore